WhatToDo NYC

Anna Merkulova, Anany Srivastava, Cecilia D’LCano

1

Tech Stack

Frontend

Next.js

- React framework with built-in routing
- Fast refresh during development
- Server-side rendering for performance

Tailwind CSS

- Style components directly in JSX
- No separate CSS files needed

Google Maps JS SDK

- Straightforward integration in Next.js
- Interactive map visualization
- Custom markers and clustering
- Handles navigation handoff

Backend

Python w/ FastAPI

- Async/await for concurrent API calls
- Auto-generates API documentation
- Python-based (team familiarity)

Pydantic

- Validates requests/responses automatically
- Prevents malformed data

SQLAlchemy

- Maps database tables to Python classes
- Handles foreign key relationships

JWT Auth

- Stateless authentication
- Role-based access control (customer, reviewer, seller, admin)
- Able to enforce permissions at the endpoint level

Database

PostgreSQL

- Strong ACID guarantees enforce foreign key constraints
- JSONB columns for weather data storage
- PostGIS for geospatial distance calculations
- Built-in full-text search

Supabase

- Hosted Postgres (no server management)
- Automatic backups
- Free tier for development

Tables at a Glance

Table	Purpose
users	Registered accounts and roles (customer/reviewer/seller/admin).
places	Canonical listings (restaurants/events/activities) with location and seller management.
place_hours	Normalized weekly hours (one row per place per day).
reviews	User reviews with multi-dimensional ratings and optional text.
authenticity_votes	Per-user vote indicating authentic vs tourist-oriented for a place.
tags	Unique descriptive tags (e.g., cozy, good-for-groups).
place_tags	Join table mapping tags to places (many-to-many).
promotions	Seller promotions with time window and bounded boost.
weather_snapshots	Cached weather responses by geographic bucket + time.
saved_lists	Named lists owned by users (favorites/plans).
saved_list_items	Join table mapping saved lists to places.

ER Diagram

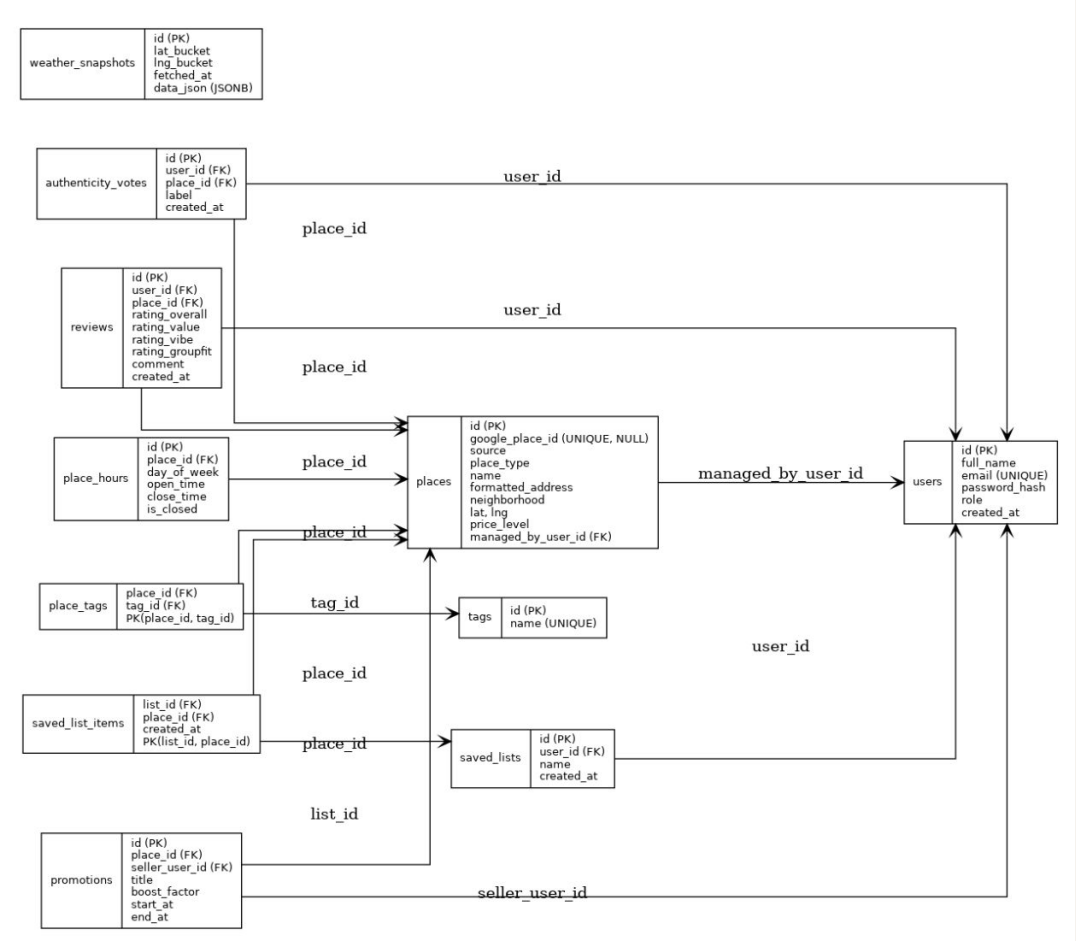
weather_snapshots
id (PK)
lat_bucket
lng_bucket
fetched_at
data_json (JSONB)
authenticity_votes
id (PK)
user_id (FK)
place_id (FK)
label
created_at
user_id
place_id
reviews
id (PK)
user_id (FK)
place_id (FK)
rating_overall
rating_value
rating_vibe
rating_groupfit
comment
created_at
user_id
place_id
place_hours
id (PK)
place_id (FK)
day_of_week
open_time
close_time
is_closed
place_id
places
id (PK)
google_place_id (UNIQUE, NULL)
source
place_type
name
formatted_address
neighborhood
lat, lng
price_level
managed_by_user_id (FK)
managed_by_user_id
users
id (PK)
full_name
email (UNIQUE)
password_hash
role
created_at
place_id
place_tags
place_id (FK)
tag_id (FK)
PK(place_id, tag_id)
tag_id
tags
id (PK)
name (UNIQUE)
user_id
place_id
saved_list_items
list_id (FK)
place_id (FK)
created_at
PK(list_id, place_id)
place_id
saved_lists
id (PK)
user_id (FK)
name
created_at
list_id
promotions
id (PK)
place_id (FK)
seller_user_id (FK)
title
boost_factor
start_at
end_at
seller_user_id

External APIs

Google Places API

- Provides restaurant data: names, addresses, hours, prices
- Nearby Search finds restaurants within radius
- Place Details gives comprehensive venue info
- Returns structured reliable data with consistent formatting

AccuWeather API

- Real-time weather for context-aware recommendations
- Returns temperature, precipitation, conditions
- Cache by region (5-6 Manhattan buckets) to reduce API calls

WhatToDo NYC — System Architecture

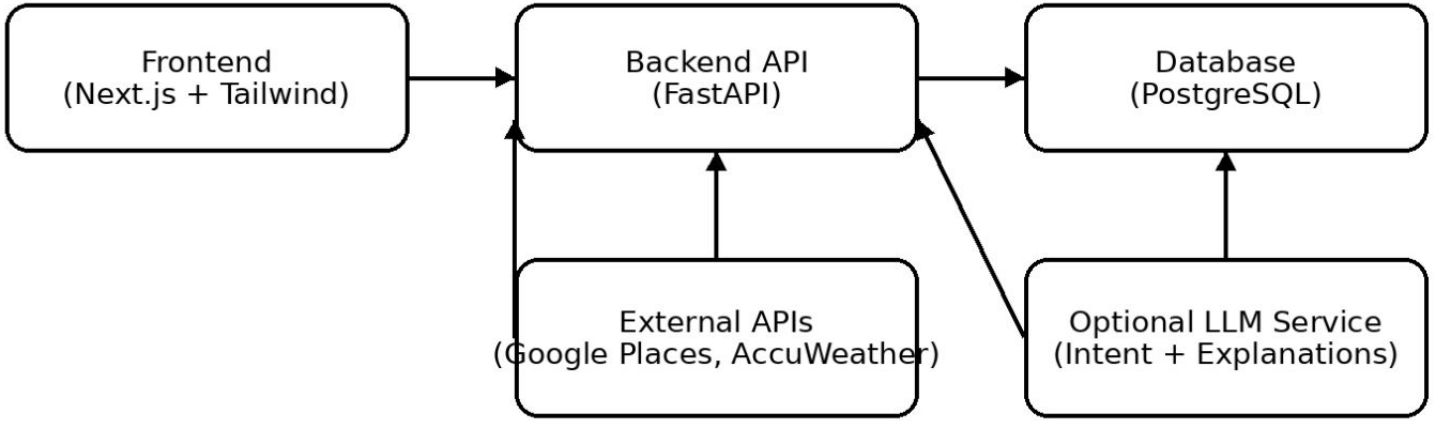

Frontend handles UI + maps visualization. Backend performs filtering/ranking and talks to Postgres. External services enrich data.

2

Use Cases

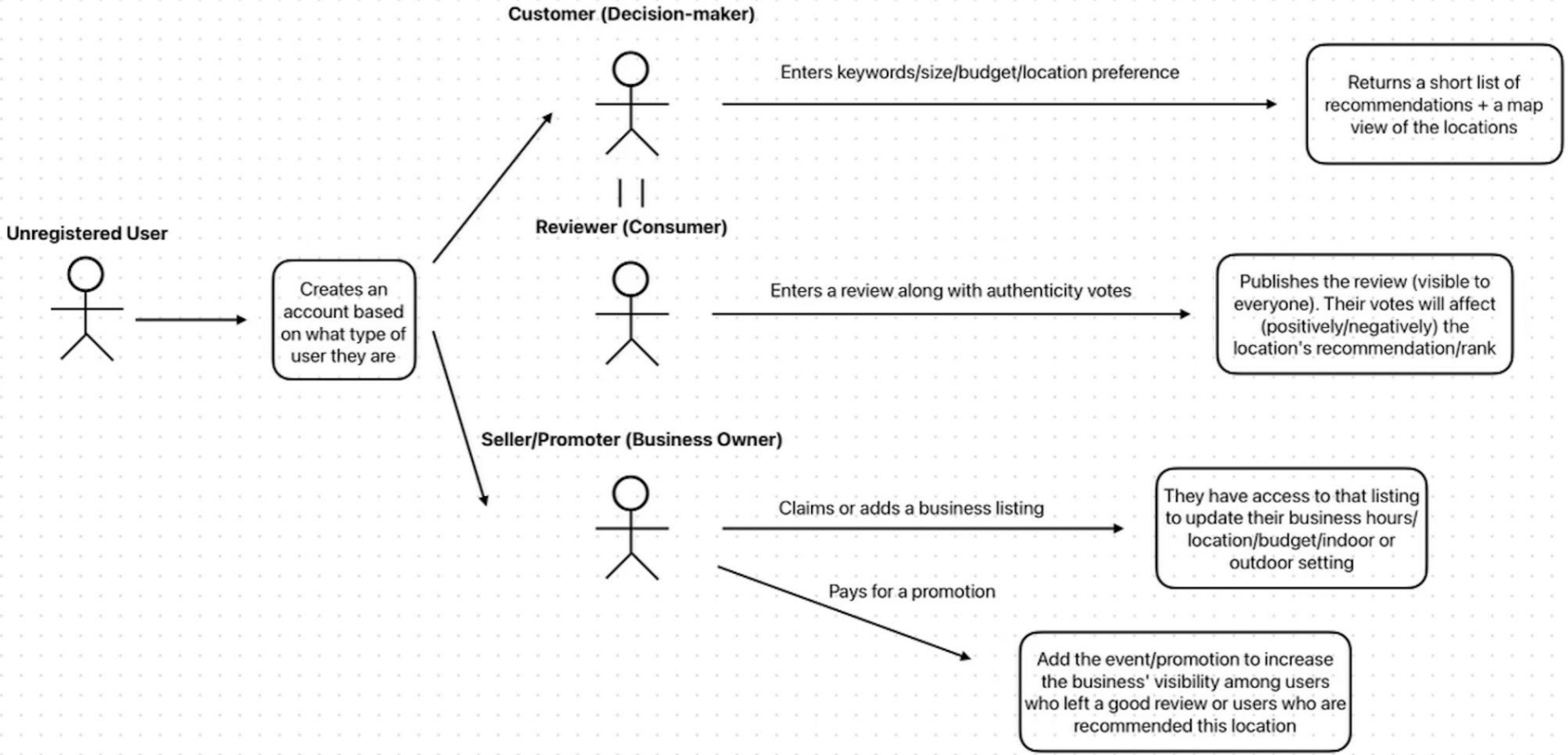
Customer (Decision-maker)
Enters keywords/size/budget/location preference
Returns a short list of recommendations + a map view of the locations
Reviewer (Consumer)
Unregistered User
Creates an account based on what type of user they are
Enters a review along with authenticity votes
Publishes the review (visible to everyone). Their votes will affect (positively/negatively) the location's recommendation/rank
Seller/Promoter (Business Owner)
Claims or adds a business listing
They have access to that listing to update their business hours/ location/budget/indoor or outdoor setting
Pays for a promotion
Add the event/promotion to increase the business' visibility among users who left a good review or users who are recommended this location